MEETING DATE: 4-14-16

# PLANNING COMMISSION

## Case No. P16-07

## 236 N. State

# CITY of MEDINA
## Planning Commission
### April 14, 2016 Meeting

**Case No:** P16-07

**Address:** 236 N. State Road

**Applicant:** David Teper & Chris Handy - Owners

**Subject:** Conditional Zoning Certificate and Site Plan Review – Retail/Convenience Store and Drive Through in the I-1 District

**Zoning:** I-1, Industrial

**Submitted by:** Justin Benko – Associate Planner JB

---

**Site Location:**
The site is located in the 200 block of North State Road and is surrounded on all sides by I-1 zoning.

**Project Introduction:**
The applicant was granted approval for the proposed 1,500 sq. ft. retail convenience store with a drive-thru in case P15-08. Construction at the site did not begin and the approval expired. The applicant has reapplied for site plan and conditional zoning certificate approval with the only notable change consisting of the circulation at the site. In P15-08 customers would have to exit the site via the drive thru or by an easement on the neighboring property. The applicant determined the costs associated with the easement were prohibitive; therefore, an additional drive isle is proposed parallel to the drive thru which eliminates the need for the easement.

The site is currently occupied by a small detached single family house. The applicants wish to expand the use on the property with the proposed convenience store while also maintaining the existing single family house to be used for storage for the proposed retail use. Along with the proposed building, the applicant proposes a 6 space parking lot to the rear (east) of the existing and proposed buildings with a drive through lane and bypass incorporated.

Please find attached to this report:

1. Site development plans February 29, 2016
2. Aerial photograph
3. Landscape Plan dated March 1, 2015
4. Building Elevations

**Section 1153 Conditional Use Standards:**
The Planning Commission shall review the particular facts and circumstances of each proposed use in terms of the following standards:

*(1) Will be harmonious with and in accordance with the general objectives or with any specific objectives of the Land Use and Thoroughfare Plan of current adoption;*
*(2) Will be designed, constructed, operated and maintained so as to be harmonious and appropriate in appearance with the existing or intended character of the general vicinity and that such use will not change the essential character of the same area;*
*(3) Will not be hazardous or disturbing to existing or future neighboring uses;*
*(4) Will not be detrimental to property in the immediate vicinity or to the community as a whole;*
*(5) Will be served adequately by essential public facilities and services such as highways, streets, police and fire protection drainage structures, refuse disposal and schools; or that the persons or agencies responsible for the establishment of the proposed use shall be able to provide such service adequately;*
*(6) Will be in compliance with State, County and City regulations;*
*(7) Will have vehicular approaches to the property which shall be so designed as not to create an interference with traffic or surrounding public streets or roads.*

Staff Comment: The proposed retail convenience store with drive through complies with all the above conditional use standards. This is a corridor of light and heavy industrial uses and the proposed use will add diversity to the mix without affecting neighboring uses. In fact, the proposed use should provide a desirable service to the existing businesses and traffic within this area.

**Site Plan and Improvement Plan Review**:

**General**
The current site is a detached single family house with a poorly defined dirt/gravel parking area/yard. The development plan will greatly improve the look and condition of the property by providing a defined paved parking and vehicle circulation area. Additionally, this will be established to the rear (east) of the proposed/existing buildings. This will recreate a nice landscaped front yard with minimal interruption except for the two vehicle drives (one general site access drive and one exit only drive from the drive through portion of the proposed building).

**Design Review Guidelines**
Section 1109.04(A) outline eight general provisions for the development in the City. The proposed project adheres to all the provisions given the heavily developed industrial context of the project's location.

More specifically, Section 1109.04(C) provides fifteen additional applicable standards for development. The proposed development meets all of these with the exception of the #11:

> Roof materials should be asphalt, fiberglass and slate. Clay tile and/or ribbed metal may have merit as a variation, but will be very carefully considered in contrast to adjacent materials.

The proposed building has what appears to be standing seam metal roofing. The above section suggests that such material may only be appropriate in limited situations and must be contextual. In the context of the proposed building, site and neighborhood, using a metal roof would be appropriate.

The applicant has only provided three exterior building elevations with the south elevation missing. The applicant's architect explained that the 'side elevation' on page SHT 4 represents that detailing and materials for both the north and south building facades.

**Site Lighting Plan:**
The applicant has only provided images of proposed site lighting, but it is not possible to determine compliance with Section 1145.09(C) (Illumination of Parking Areas).

Staff recommends the applicant provide a site lighting plan as part of the building permit review addressing the horizontal footcandle illumination throughout the site.

**Landscaping**
The proposed site will have ample landscaping areas throughout the site which complies with and exceeds the Zoning Code landscaping requirements.

**Parking Standards:**
Section 1145.04(A) of the Zoning Code requires 1 space per 400 sqft floor area retail uses. The proposed building (1,500 sqft) plus the existing single family house (900 sqft) requires 6 parking space and 6 parking spaces are provided. The applicant has altered the circulation at the site to alleviate the need for an easement. The applicant has proposed a drive isle parallel to the drive thru which uses the same exit. This should actually improve circulation at the site.

**Staff Comments:**

**Building Department.** Must submit for building permits
**Police Chief.** No comment at this time
**Service Department.** No comments at this time

**Fire Department** No comments at this time
**Engineering Department** No comment at this time
**City Forester** "If [street] trees are to be removed for construction it will be at owners expense. Forestry can issue a permit"
**Economic Development**. No comment at this time

**Public Hearing:** The Zoning Code requires the Planning Commission to conduct a Public Hearing for the proposed Conditional Use. The legal notices have been issued to permit the Public Hearing at the April 16, 2016 meeting. Based on the review of the case and the public hearing the Planning Commission may impose such additional conditions and safeguards deemed necessary for the general welfare, for the protection of individual property rights and for the insuring that the intent and objectives of this Zoning Ordinance will be observed.

**Recommendation:**
Staff recommends approval of the proposed conditional use certificate for the proposed retail convenience store with drive through subject to the following conditions:

1. Subject to building permits from the Medina Building Department.
2. Prior to issuance of a building permit, the applicant must provide a compliant site lighting plan addressing the requirements of Section 1145.09(C) of the Planning and Zoning Code.

P16-07
236 N. State Road
Conditional Use Review
for Convenience Retail and
Drive Through
April 14. 2016

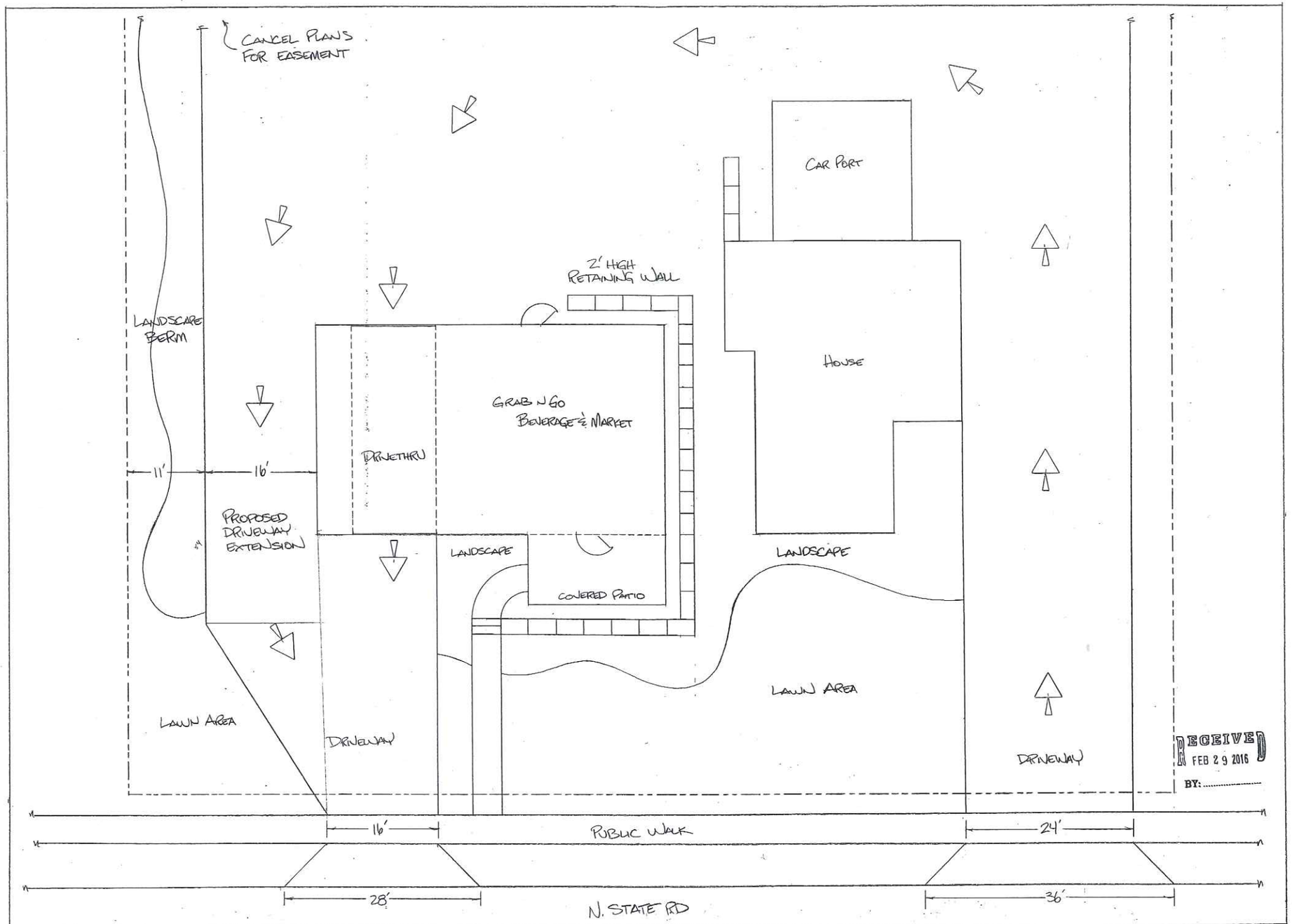


RECEIVED
FEB 29 2016
BY: .....

GRAB N GO BEVERAGE & MARKET • 236 N. STATE RD, MEDINA, OH 44256 • PROPOSED DRIVEWAY CHANGES • PLANNING & ZONING APPROVAL • SCALE 1/8"=1'

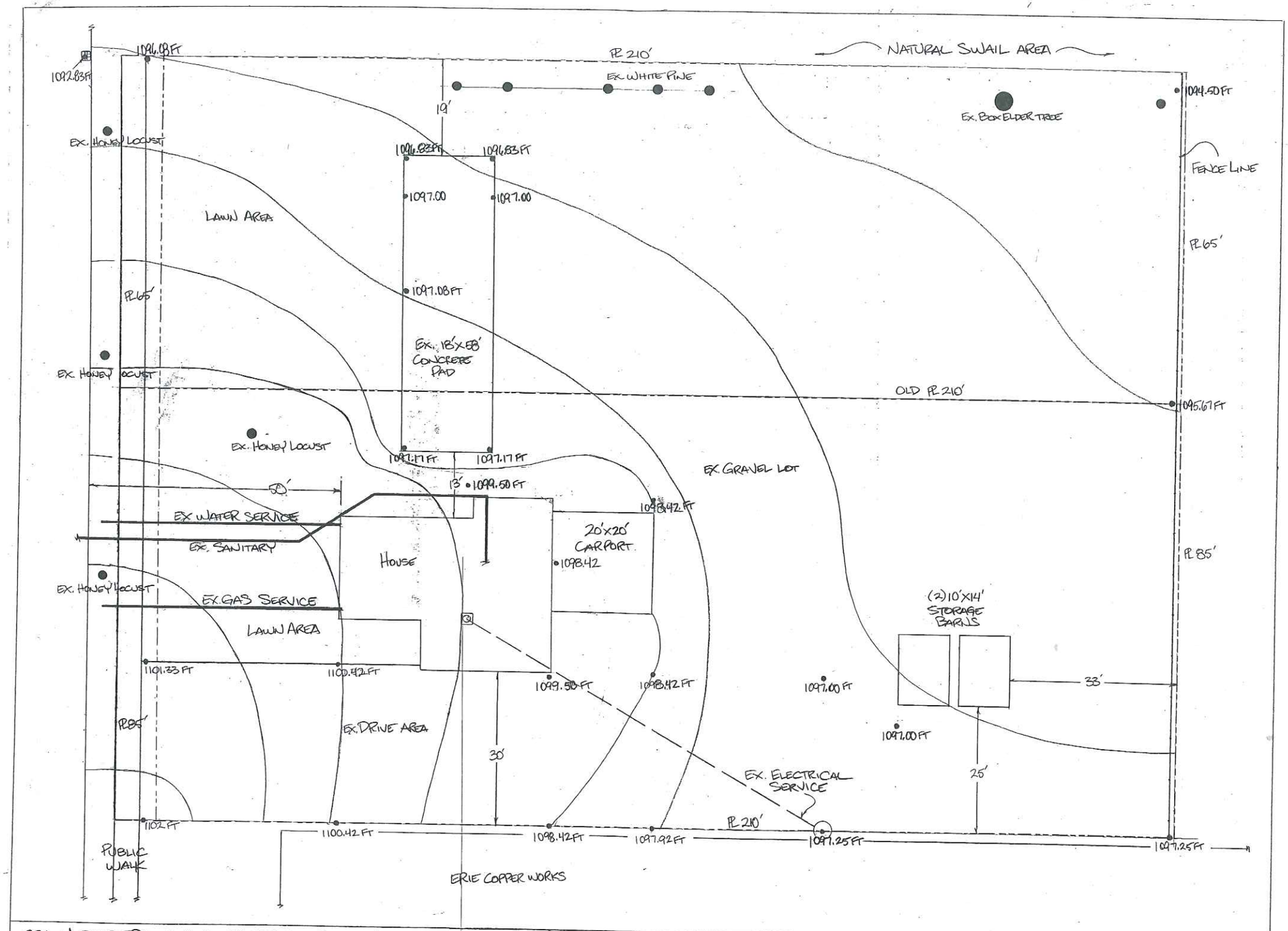


236 N. STATE RD • MEDINA, OH 44256 • GRAB N GO BEVERAGE & MARKET • ELEVATIONS OF PROPERTY • 2/29/16

SCALE 3/32

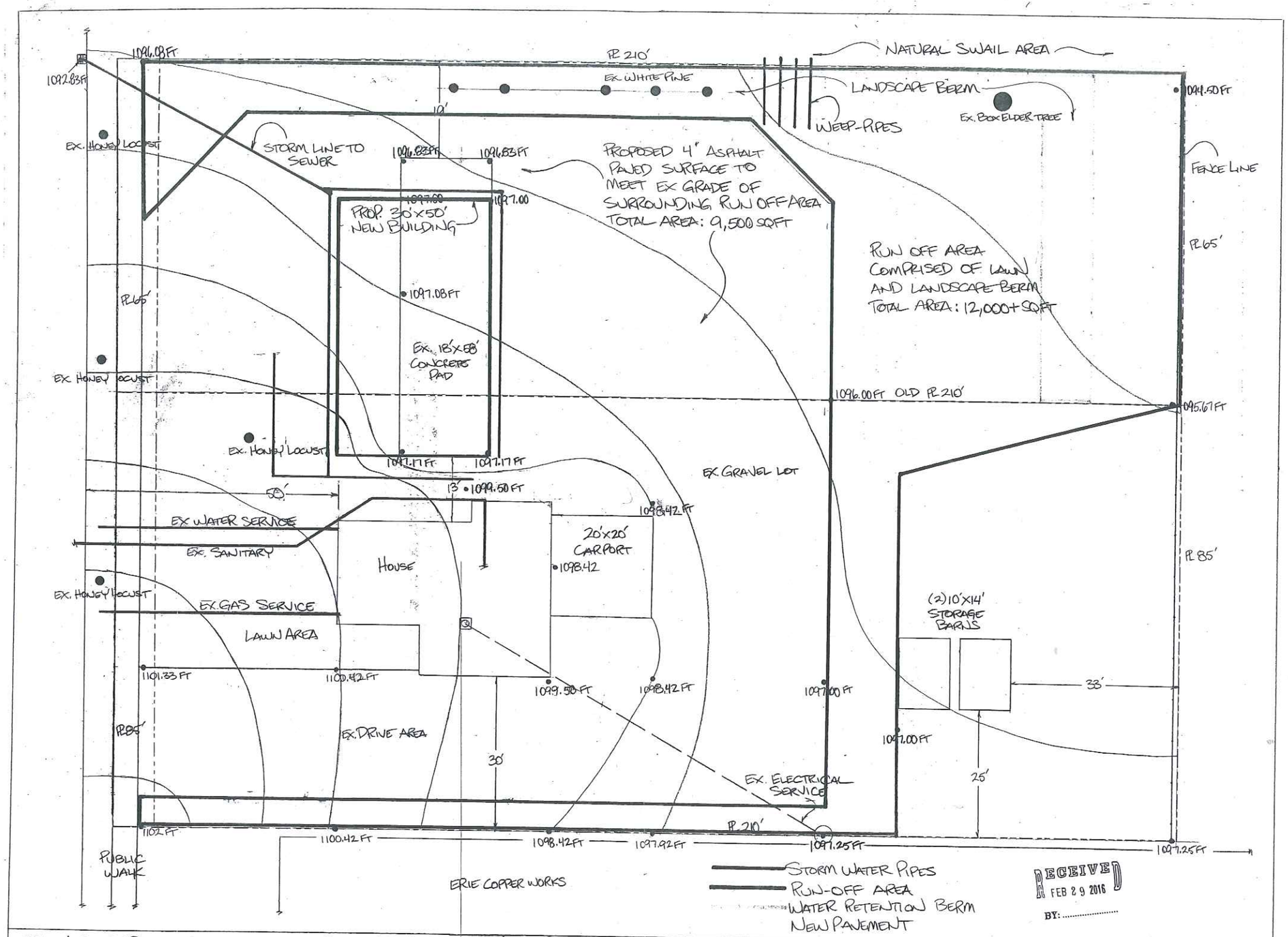


236 N. STATE RD • MEDINA, OH 44256 • GRAB N GO BEVERAGE & MARKET • ELEVATIONS & STORM WATER MANAGEMENT • ENGINEERING • SCALE 3/32

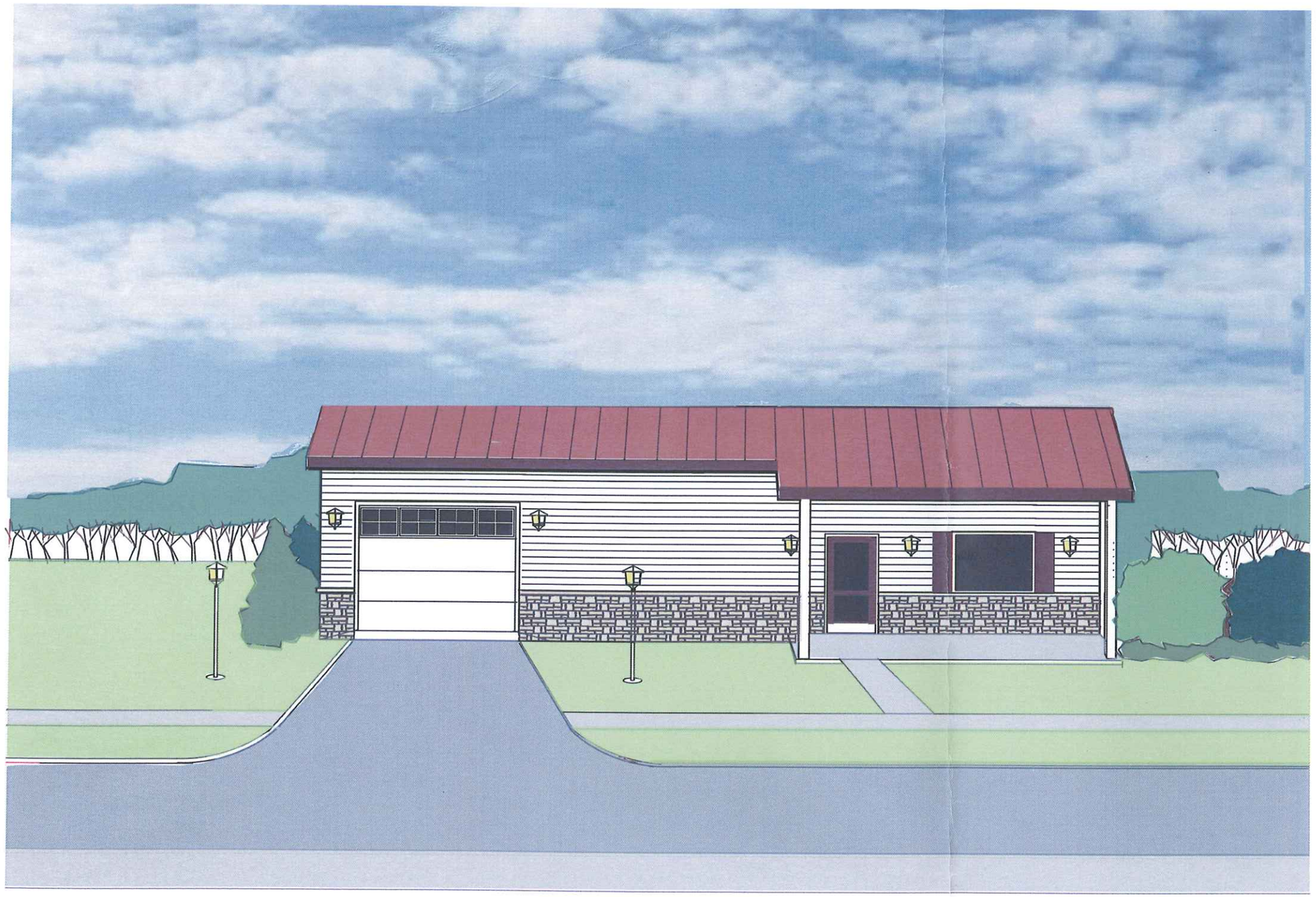

FRONT ELEVATION

RECEIVED
MAR 01 2015
BY: .....

2/25/2015

A BEVERAGE DRIVE THRU
AND DELI FOR

GRAB N GO BEVERAGE
AND DELI

236 NORTH STATE RD.
MEDINA OHIO 44256

John Goodworth Architect
7617 Stone Rd.
Medina Ohio 44256
330-388-2231
JPGoodworth@gmail.com

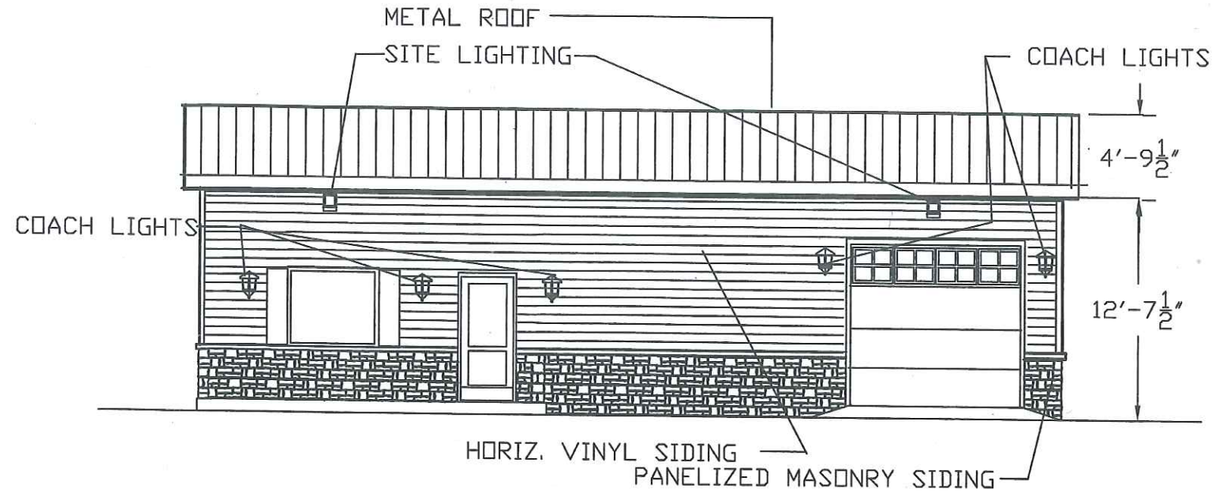


REAR ELEVATION

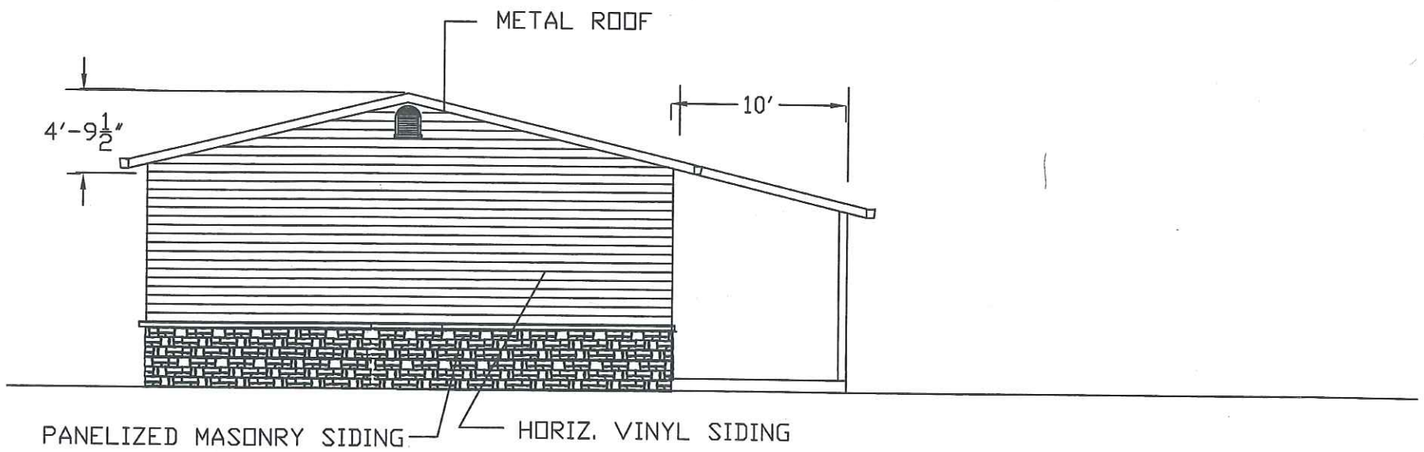


SIDE ELEVATION

1/20/ 2015

A BEVERAGE DRIVE THRU
AND DELI FOR

GRAB N GO BEVERAGE
AND DELI

236 NORTH STATE RD.
MEDINA OHIO 44256

RECEIVED
MAR 05 2015
BY: .....

ELEVATIONS SCALE 1/4"=1'-0"

John Goodworth Architect
7617 Stone Rd.
Medina Ohio 44256
330-388-2231
JPGoodworth@gmail.com

SHT. 4